REVISIONS						
ZONE	LTR	DESCRIPTION	CHANGE No	DATE	BY	APPR'D
	REL	RELEASED FOR PRODUCTION	63846	18APR95	RMB	RMC
5-C	A	A1 ADDED STAMPING INFORMATION	64907	22FEB99	TMS	RMB
4-D	B	B1 40° WAS 45°	68608	02APR03	RMB	TB
5-E 3-D	C	C1 CHANGED OUTLET COVER C2 ADDED DIMENSION	68710	03DEC03	RMB	BJB
5-C	D	D1 REMOVED PATENT #'S	71352	18JUN08	DRG	BLM
4-D 5-E	E	E1 REPLACED OUTLET FITTING & CHECK VALVE ASSEMBLY E2 139.23/135.44 WAS 134.4/130.6	71719	03NOV08	DRG	MMcK
6-E 5-E 6-E 6-D 7-D 5-C ---	F	F1 23.2/22.4 WAS 22.5/21.5 F2 139.77/136.11 WAS 139.23/135.44 F3 111.9/109.6 WAS 111.7/109.3 F4 70.8±1.2 WAS 70.1±1.1 F5 Ø37.7/36.3 WAS Ø37.4/36.3 F6 UPDATED STAMPING INFO F7 UPDATED DRAWING FORMAT	C'5018	11JAN18	SLK	BLM
5-E	G	G1 DBTC000302 MAGNETS WERE 184-27	83671	20JUL23	JTK	MLM

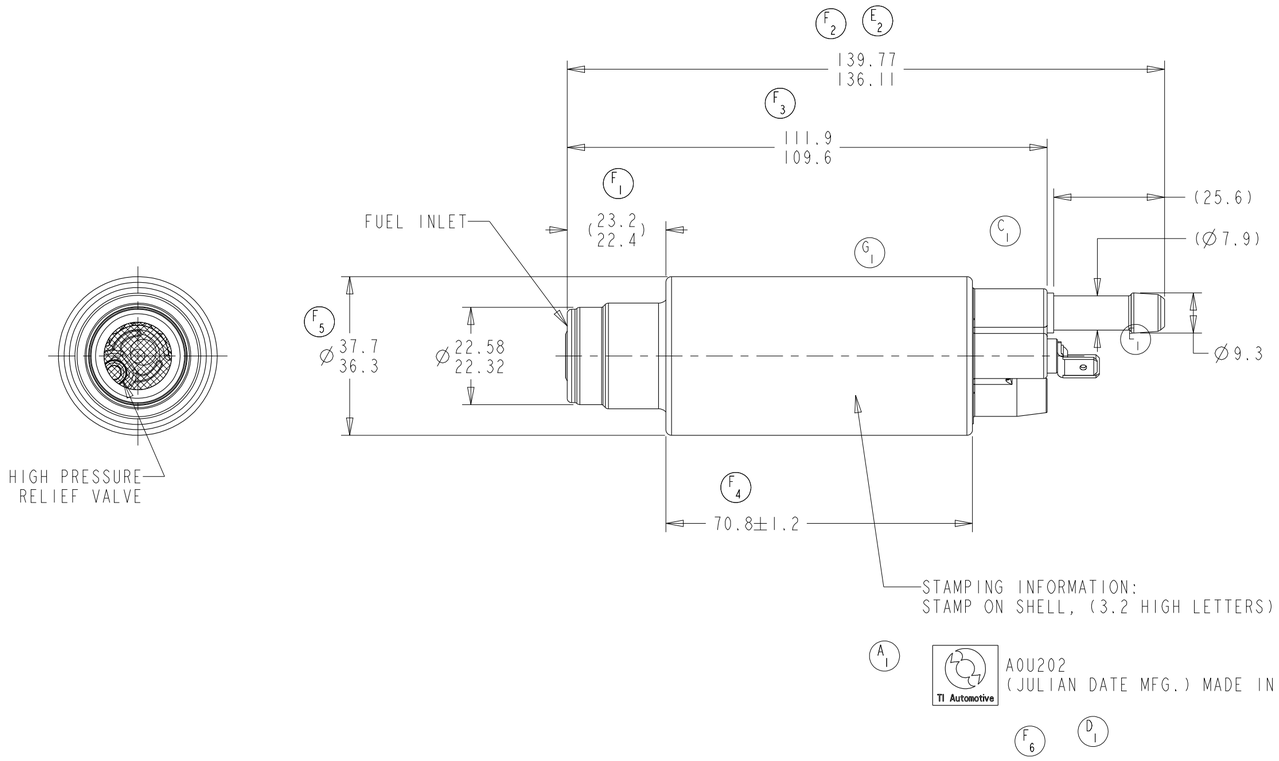

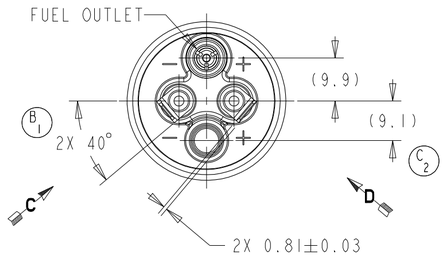

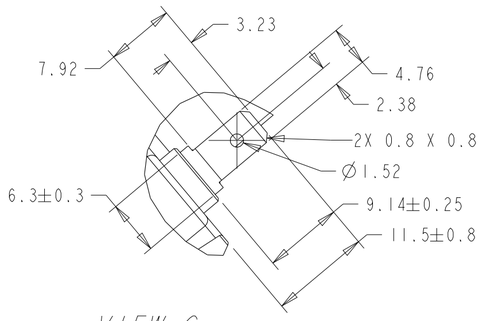

VIEW C
SCALE 2:1

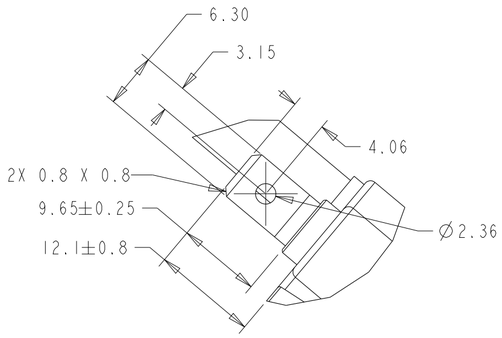

VIEW D
SCALE 2:1

NOTE:

PUMP TO HAVE PLUG PROTECTORS FOR BOTH INLET AND OUTLET, AND BE IN A POLY-BAG

KEY PRODUCT CHARACTERISTICS

REFER TO TI AUTOMOTIVE GLOBAL ADVANCED QUALITY PLANNING DOCUMENT CW-4-ALL-411 FOR THE CLASSIFICATION AND CONTROL OF KEY PRODUCT CHARACTERISTICS

TYPE OF CHARACTERISTIC	SAFETY	REGULATORY	FUNCTION	FUNCTION PROCESS
NUMBER PER EACH CHARACTERISTIC	--	--	--	--
TOTAL NUMBER OF CHARACTERISTICS	--			

- TI AUTOMOTIVE CONFIDENTIAL AND PROPRIETARY -
THIS DRAWING IS PROPERTY OF TI AUTOMOTIVE. TI AUTOMOTIVE CLAIMS PROPIETARY RIGHTS IN THE SUBJECT MATTER SHOWN AND DESCRIBED ON THIS DRAWING AND RETAINS ALL INTELLECTUAL PROPERTY RIGHTS. THE DRAWING IS PROVIDED FOR REFERENCE PURPOSES ONLY AND ON THE EXPRESS CONDITION THAT IT WILL BE HELD IN CONFIDENCE. THIS DRAWING SHALL NOT BE DISCLOSED TO OTHERS OR USED FOR THE PURPOSE OF MANUFACTURE BY OR PROCUREMENT FROM OTHERS OF THE ARTICLE OR PART SHOWN WITHOUT TI AUTOMOTIVE'S EXPRESS WRITTEN CONSENT. NO LICENSE OR OTHER RIGHT IS GIVEN OR IMPLIED BY THE PROVISION OF THIS DRAWING TO RECIPIENT.
COPYRIGHT, TI AUTOMOTIVE 2018, ALL RIGHTS RESERVED.

METRIC
ALL DIMENSIONS ARE IN MILLIMETERS

DO NOT SCALE
DECIMAL TOLERANCES UNLESS OTHERWISE SPECIFIED
ONE PLACE ±0.25 TWO PLACE ±0.13 ANGLES ±1°

THIRD ANGLE PROJECTION

DIMENSIONS IN ACCORDANCE WITH ASME Y14.5 - 2009

TI Automotive
630 COLUMBIA ST.
CARO, MI 48723
+1 989.673.7727

ENGINEER:			MATERIAL/SPECIFICATION: SEE NOTES
DESIGNER:	DPS	13APR1995	
CAD SYSTEM: PRO/E	SCALE: 1:1	SHEET NO. 1 OF 1	
REFERENCE ID/REV.: HJPX0037		2D PLM REFERENCE/REV.: AR0005923/AG	
REFERENCE ID/REV.: 000107839/AC		3D PLM REFERENCE/REV.: AR0047573/AB	
DRAWING NAME: FUEL PUMP OUTLINE			
SIZE: A2	DRAWING NUMBER: A0U202		